FLEXSON
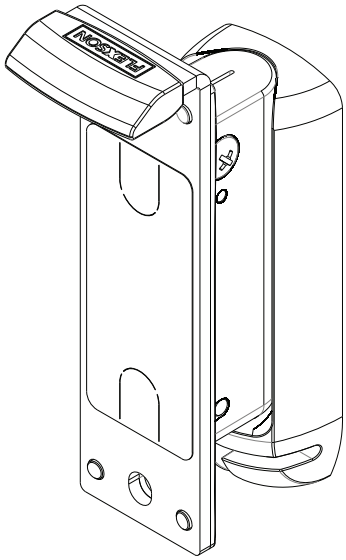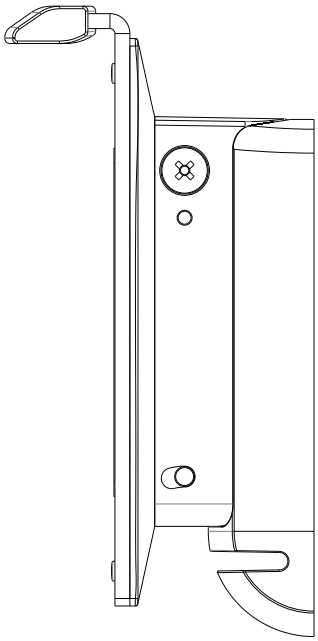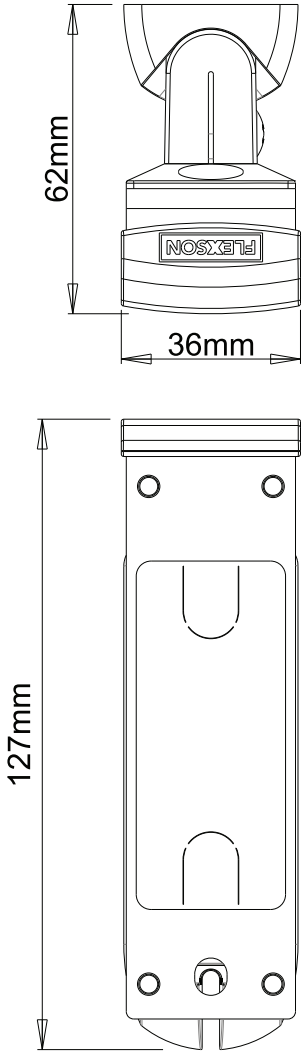
FLXP1WB